EURO

HVLP AIR SPRAY GUN

EURO 3200H SERIES

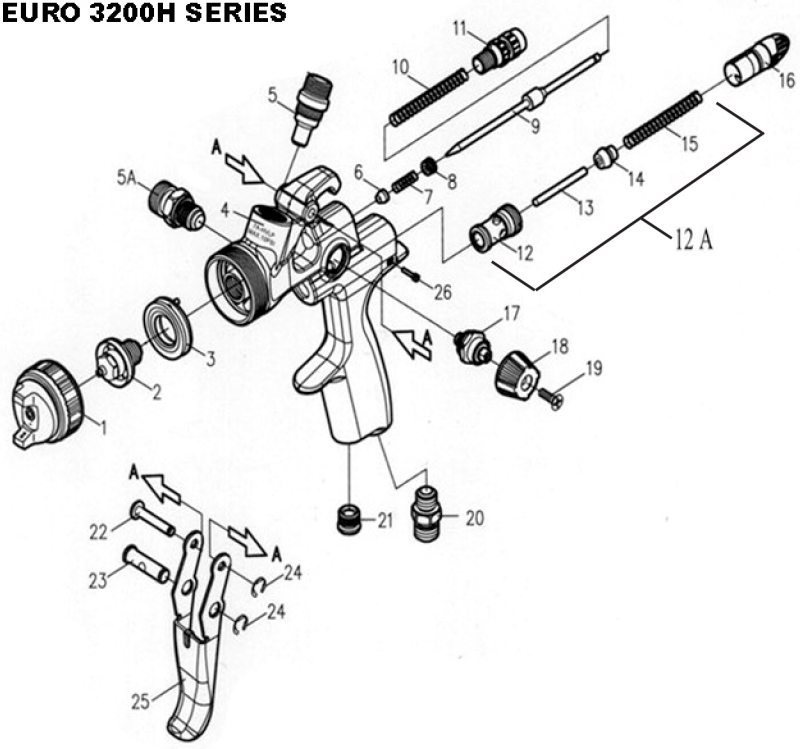

BREAKDOWN

Item No	Description	Q'ty	Item No	Description	Q'ty
1	Air Cap Set	1	13	Air Valve Shaft	1
2	Fluid Nozzle	1	14	Air Valve Gasket	1
3	Distribute Seat	1	15	Spring	1
4	Gun Body	1	16	Air Control Set	1
5	Fluid Inlet (M16x1.5P)	1	17	Fan Control Assembly	1
5A	Fluid Inlet (1/4")	1	18	Control Knob	1
6	Needle Packing	1	19	Screw	1
7	Spring	1	20	Air Inlet	1
8	Needle Packing Seat	2	21	Plug	1
9	Fluid Needle seat	1	22	Pin	1
10	Fluid Needle Spring	1	23	Hollow Pin	1
11	Control Knob Set	1	24	E -Stopper	2
12 A	Set No 12, 13, 14, 15	1	25	Trigger	1
12	Air Valve Seat	1	26	Screw	1