Ventaire www.ventaire.com	LAYOUT	EXTENSION BOOM WITH MOTORIZED HOSE REEL

PROJECT:

LOCATION:	ENGINEER:	SALES ENGINEER:
ARCHITECT:	CONTRACTOR:	DATE:

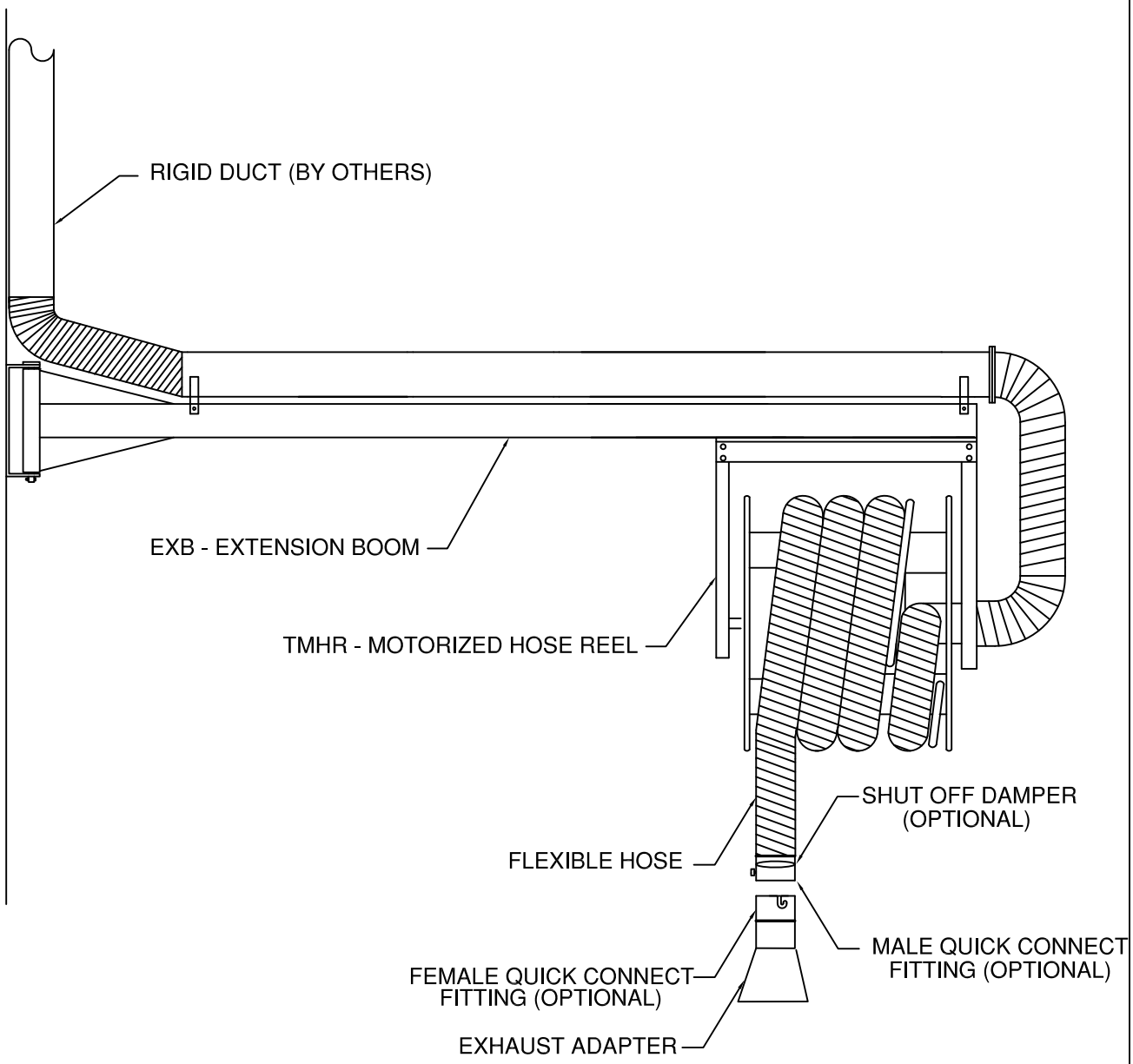

NOTES

SEE INDIVIDUAL SUBMITTAL DRAWINGS FOR ADDITIONAL INFORMATION.